Hardware - Curb Mounted - Up Blast Utility Set - 1 of 2

Curb Mounted Utility Set - Hardware - Part Information													
Item #	Part Number / AX Number	Description Of Part	11 - DD #	13 - BD #	13 - DD #	15 - BD/BDHP #	15 - DD #	18 - BD/BDHP #	18 - DD #	20 - BD/BDHP #	20 - DD #	24 - BD/BDHP #	24 - DD #
1	174930 / A0021178	1/2" - 13 x 15" Bolt Grade 5 Zinc Plate	N/A	N/A	N/A	N/A	N/A	N/A	N/A	1	1	N/A	N/A
1	174932 / A0021181	1/2" - 13 x 18" Bolt Grade 5 Zinc Plate	N/A	N/A	N/A	N/A	N/A	N/A	N/A	N/A	N/A	1	1
1	91257A165 / A0021182	1/2" - 13 x 11" Bolt Grade 5 Zinc Plate	1	1	1	1	1	1	1	N/A	N/A	N/A	N/A
2	91786A15 / A0021183	1/2" Bronze Sleeve Bushing	2	2	2	2	2	2	2	2	2	2	2
3	97135A250 / A0021410	1/2" Lock Nut	1	1	1	1	1	1	1	1	1	5	1
3	97135A230 / A0021409	3/8" Lock Nut	N/A	4	N/A	4	N/A	4	N/A	6	2	2	2
4	92620A716 / A0021405	1/2" - 13 X 1 1/2" Grade 8 Bolt	N/A	N/A	N/A	N/A	N/A	N/A	N/A	N/A	N/A	2	N/A
4	92620A628 / A0021404	3/8" - 16 X 1 1/2" Grade 8 Bolt	N/A	2	N/A	2	N/A	2	N/A	2	N/A	N/A	N/A
5	92620A729 / A0021184	1/2" - 13 x 5 Grade 8 Bolt	N/A	N/A	N/A	N/A	N/A	N/A	N/A	N/A	N/A	2	N/A
5	92620A642 / A0021529	3/8" - 16 x 5 Grade 8 Bolt	N/A	2	N/A	2	N/A	2	N/A	2	N/A	N/A	N/A
6	93484A752 / A0021408	3/8" - 16 Rivsert	N/A	N/A	N/A	N/A	N/A	1	1	3	3	3	3
6a	93484A711 / A0021407	1/4" - 20 Rivsert	1	1	1	1	1	N/A	N/A	N/A	N/A	N/A	N/A
7	1061T78 / A0021169	High Temp Shaft Grommet 3/4" Shaft	N/A	1	N/A	1	N/A	N/A	N/A	N/A	N/A	N/A	N/A
7	1061T81 / A0021170	High Temp Shaft Grommet 1" Shaft	N/A	N/A	N/A	N/A	N/A	1	N/A	1	N/A	1	N/A
8	91510A153 / A0021399	1/4 - 20 x 3/4" Wing Bolt Zinc Plate	6	6	6	6	6	6	6	6	6	6	6
9	800025 / A0005678	3/8" - 16 x 1 1/2" Whiz Bolt	N/A	4	N/A	4	N/A	4	N/A	4	N/A	4	N/A
10	800032 / A0005688	3/8" Whiz Nut	N/A	8	N/A	8	N/A	8	N/A	10	2	6	2
11	800043 / A0005703	5/16" - 18 X 1 1/2" Whiz Bolt	4	4	4	4	4	4	4	4	4	4	4
12	800033 / A0004689	5/16" - 18 Whiz Nut	4	4	4	4	4	4	4	4	4	4	4
13	800044 / A0005705	1/4" - 20 x 3/4" Whiz Bolt	13	13	13	13	13	14	14	14	14	14	14
14	800034 / A0005690	1/4" - 20 Whiz Nut	21	21	21	21	21	24	24	24	24	24	24
15	800075 / 0156122	3/16" Pop Rivet	44	54	44	54	44	54	44	52	44	54	46
16	9297RH-32 / A0021406	Spring Pin Lock	1	1	1	1	1	1	1	1	1	1	1
17	7753K129 / A0021396	2" X 2" Drain	1	1	1	1	1	1	1	1	1	1	1
18	K5-2858-07 / A0021411	Latch	1	1	1	1	1	1	1	1	1	1	1
21	SSPI-08-06-RIVET / A0022589	SSPI - 08 - 06 "Q" Rivet - 1/4"	81	77	81	79	83	77	81	98	90	119	107
22	96029-GASSPRINGCLIP / A0021174	900BA6B0 Bracket With Pin & Clip	N/A	N/A	N/A	N/A	N/A	N/A	N/A	N/A	N/A	N/A	2
23	AF551-098-GASSPRING / A0021172	B1B1F55-150-412/1170N Gas Spring	N/A	N/A	N/A	N/A	N/A	N/A	N/A	N/A	N/A	N/A	1
24	1319 / A0003352	View Port	N/A	1	N/A	1	N/A	1	N/A	1	N/A	1	N/A
25	90096A583 / A0021426	5/16 - 18 x 1" Threading Screw	4	4	4	4	4	4	4	4	4	4	4
26	10325757 / A0026717	1/4"-20 x 2"L One End Threaded Stud	1	1	1	1	1	N/A	N/A	N/A	N/A	N/A	N/A
26	10325756 / A0026718	3/8"-16 x 2"L One End Threaded Stud	N/A	N/A	N/A	N/A	N/A	1	1	1	1	1	1
27	10325755/ A0026937	3/8"-16 x 1-7/8"L Two Ended Threaded Stud	N/A	N/A	N/A	N/A	N/A	N/A	N/A	2	2	2	2
28	11626-03227/ A0026241	1/4"-20 Cage Nut used in 12 Ga.	6	6	6	6	6	6	6	6	6	6	6
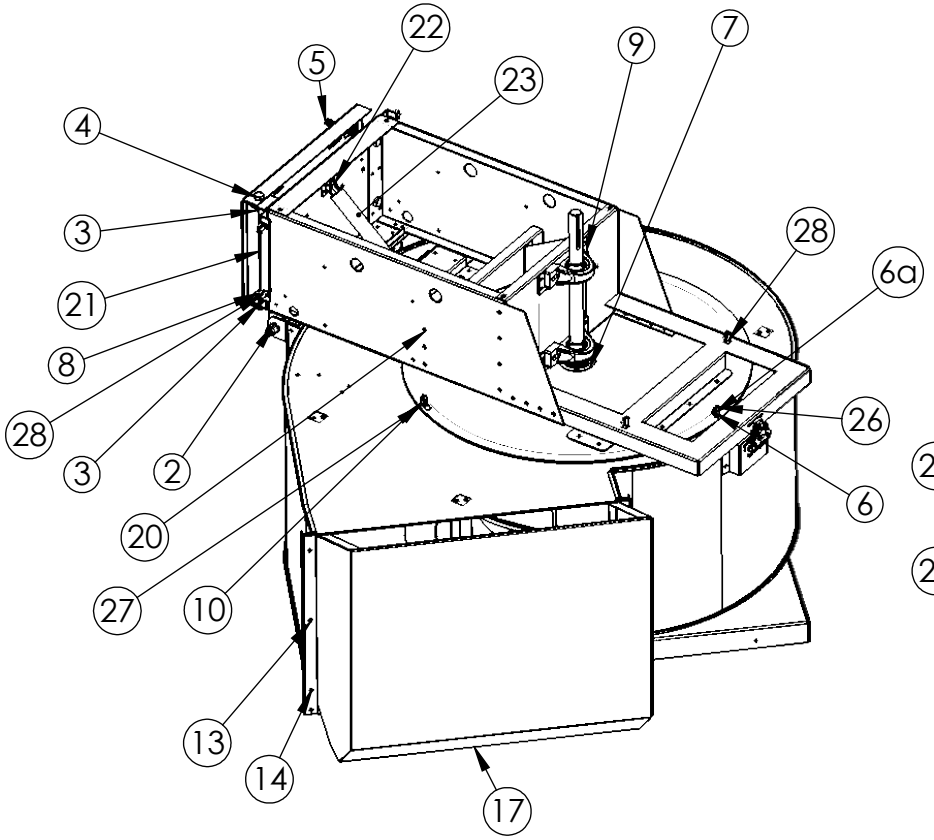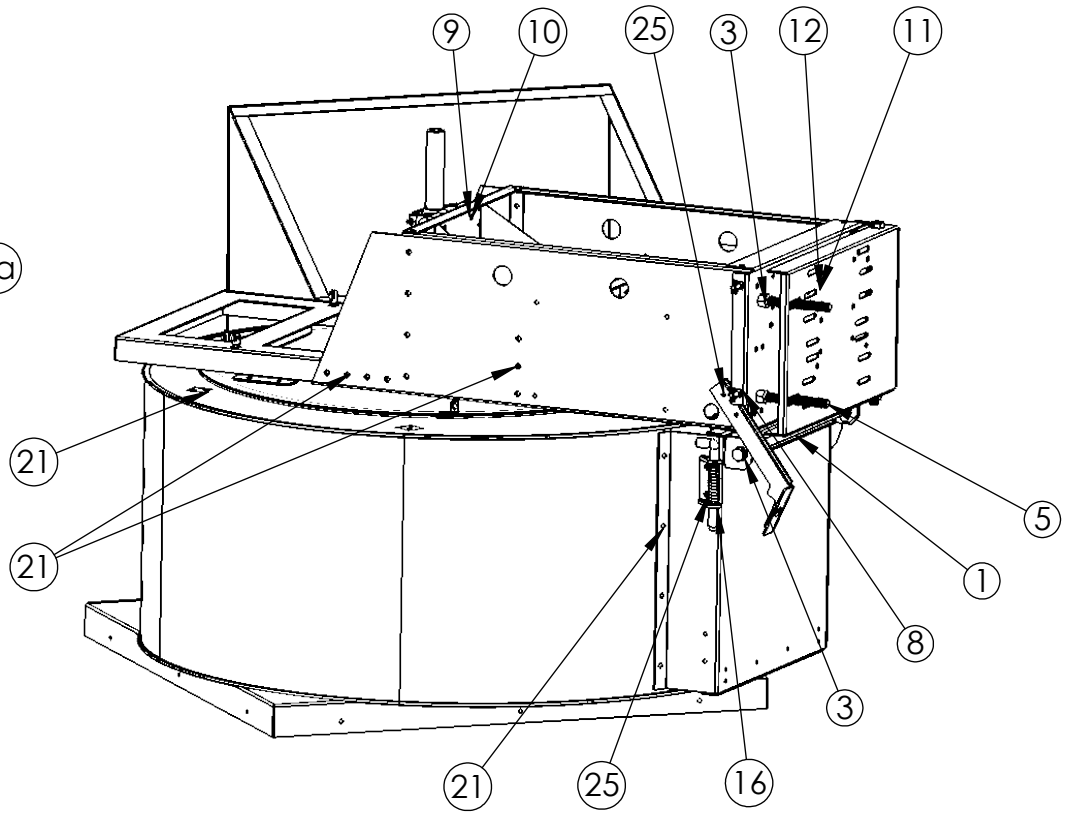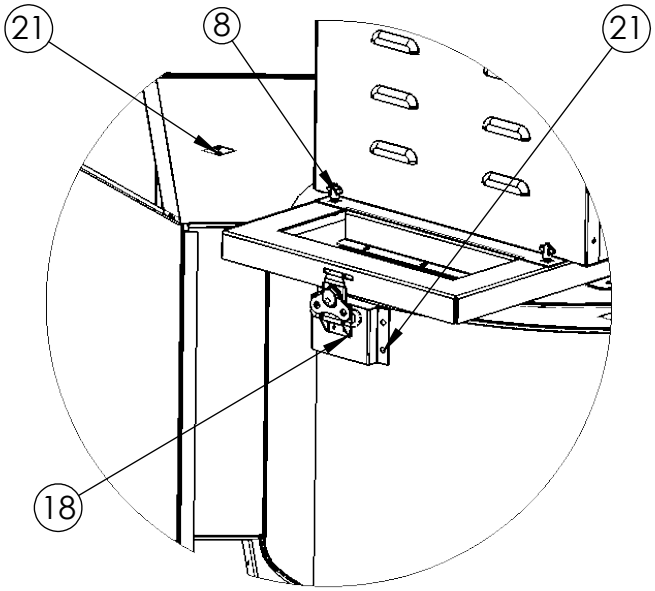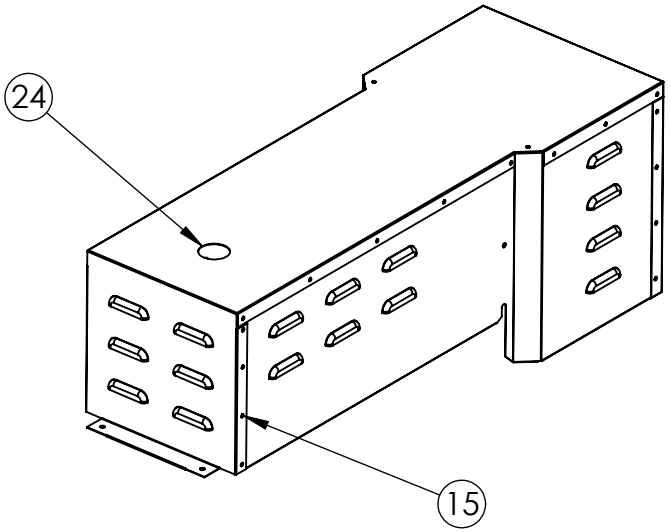
Hardware - Curb Mounted - Up Blast Utility Set - 2 of 2